AMBIENT RING ONE
PENDANT

ART IMITATING LIGHT
DEAN PHILLIPS

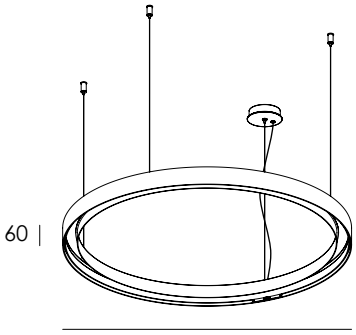

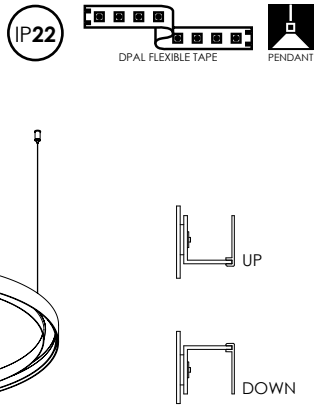

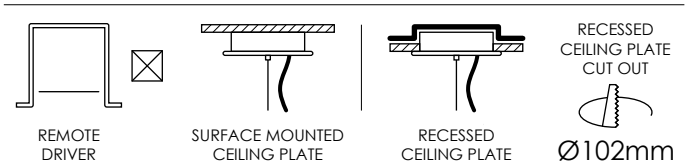

DESIGN FEATURES

- Minimalist design aesthetic
- Available in powder coat finishes
- Available in multiple outputs
- Adjustable suspension height
- Custom central ceiling plate optional for concentric chandelier

INSTALLATION FEATURES

- Australian designed and made
- 5 year product warranty
- 10 year extended warranty optional
- Easy install ceiling plate

SPECIFICATIONS

MATERIAL
ALUMINIUM / HIGH IMPACT OPAL ACRYLIC

FINISH
POWDER COAT

LAMP
DPAL 24V FLEXIBLE LED TAPE

OUTPUT

SIZE	*DPAL20*	*DPAL60*
910:	20W / 1456lm	46W / 3158lm
1133:	25W / 1820lm	57W / 3948lm
1356:	30W / 2184lm	68W / 4738lm
1579:	35W / 2548lm	80W / 5527lm
1802:	40W / 2912lm	91W / 6317lm

RAW LAMP FLUX

NOTE
CUSTOM P/COAT COLOURS AVAILABLE WITH SET UP FEE

OPTIONS

TYPE:	Up / Down
SIZE:	Ø910 / Ø1133 / Ø1356 / Ø1579 / Ø1802
FINISH INTERIOR:	White / Black / Bronze / Silver / Gold
FINISH EXTERIOR:	White / Black / Bronze / Silver / Gold
CEILING PLATE FINISH:	White / Black
CEILING PLATE TYPE:	Surface Mounted / Recessed
SUSPENSION TYPE:	2m Wire / 4m Wire
LED:	DPAL20 / DPAL60
COLOUR TEMP:	2700K / 3000K / 4000K
DIMMING:	Non Dim / DALI Dim

PROJECT: TYPE NO.: QTY:

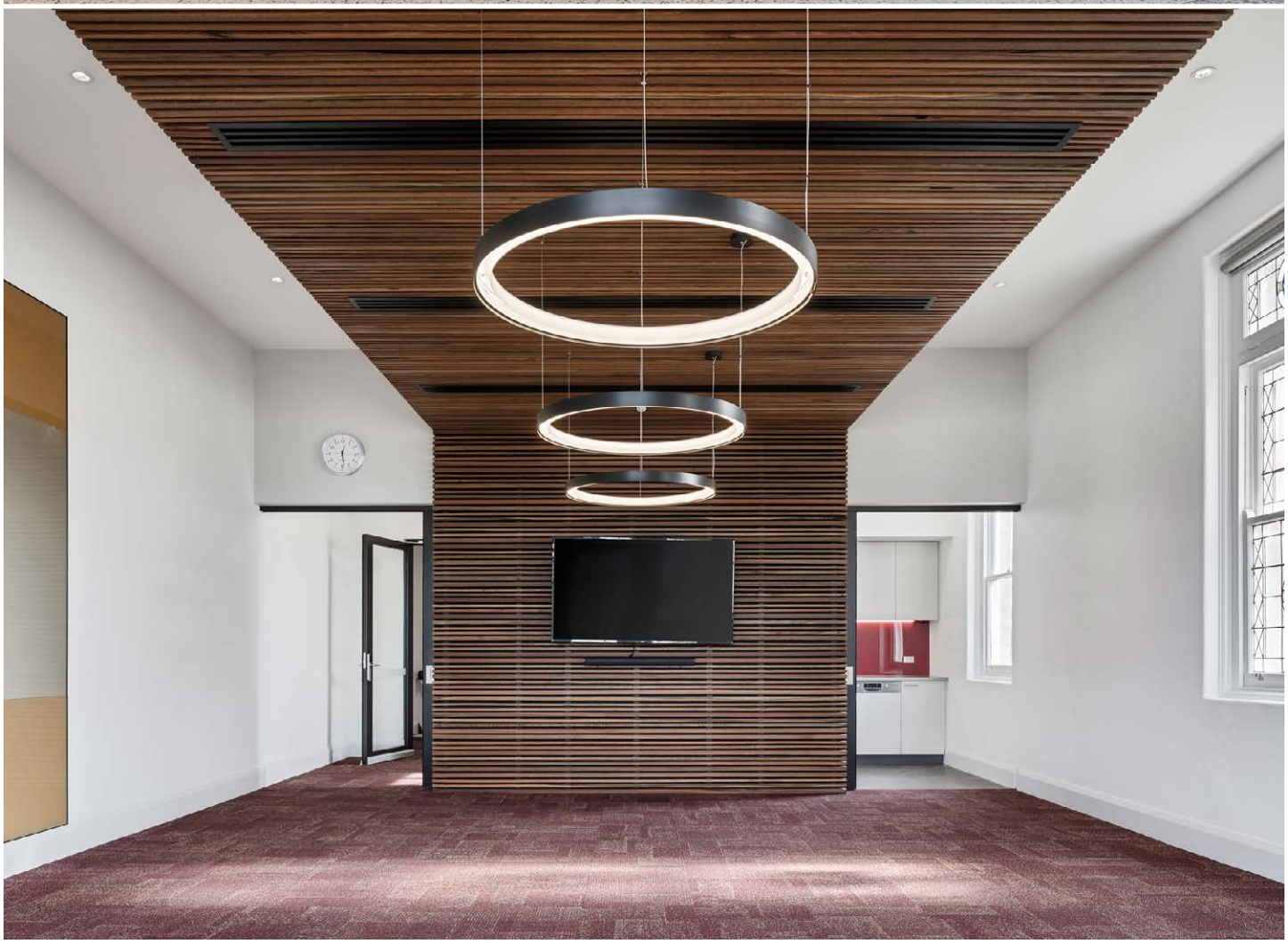

WSAudiology

Women's Clinic Lifts
G